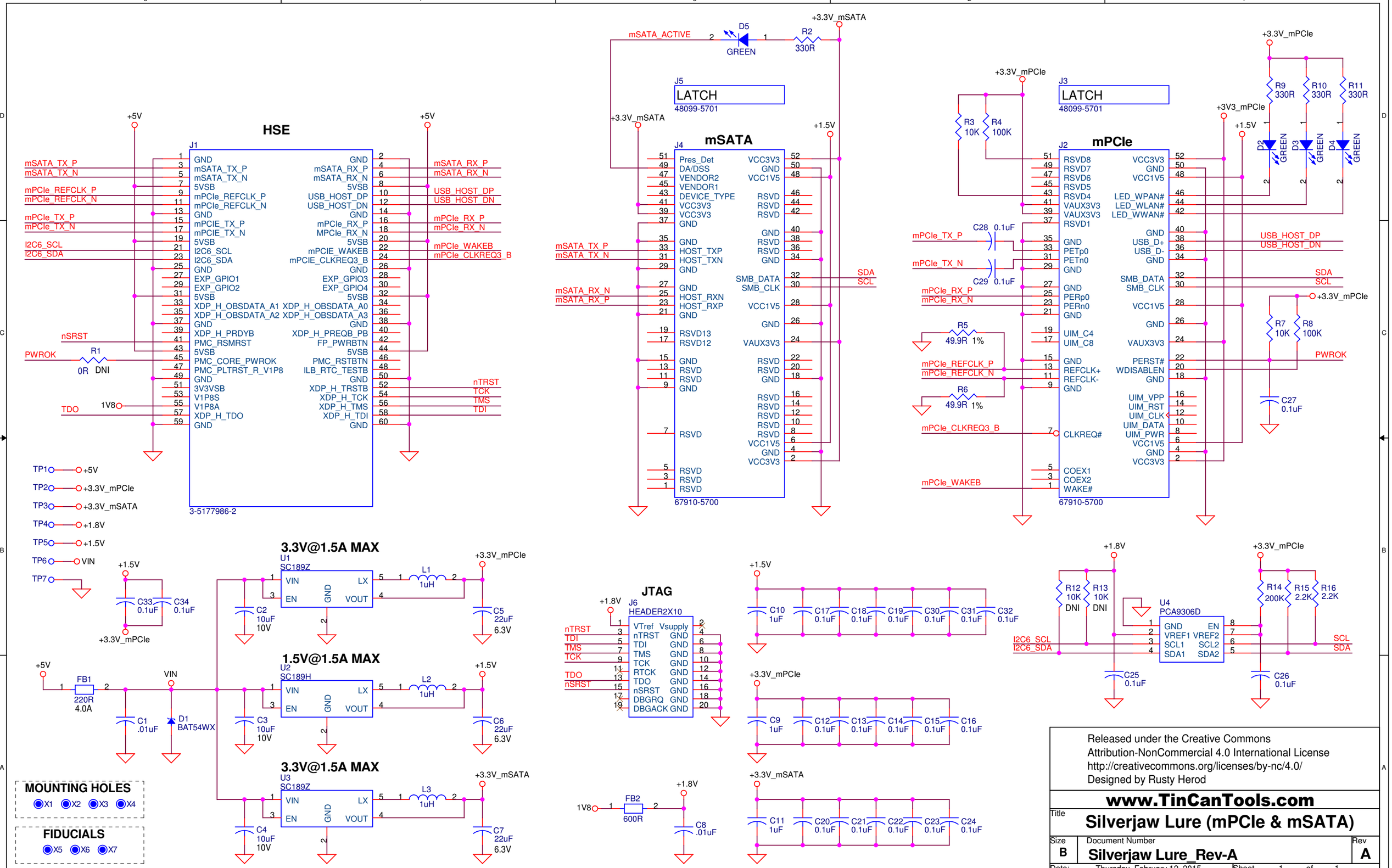

Released under the Creative Commons
Attribution-NonCommercial 4.0 International License
http://creativecommons.org/licenses/by-nc/4.0/
Designed by Rusty Herod

www.TinCanTools.com

Title: **Silverjaw Lure (mPCIe & mSATA)**

Size	Document Number	Rev
B	Silverjaw Lure_Rev-A	A

Date: Thursday, February 12, 2015 Sheet 1 of 1