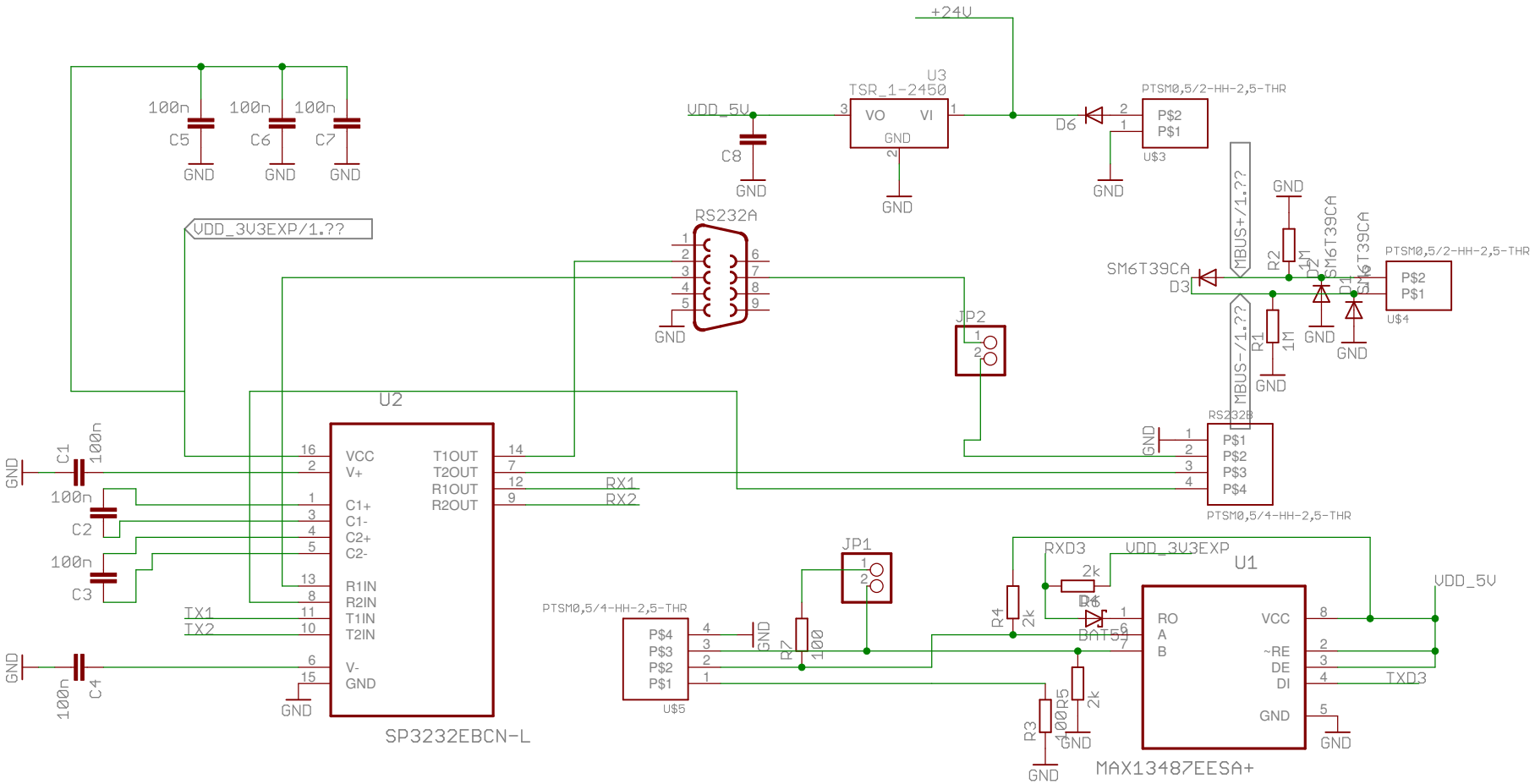
+24V
U3
TSR_1-2450
VO
VI
GND
VDD_5V
C8
D6
PTSM0,5/2-HH-2,5-THR
P$2
P$1
U$3
100n
C5
C6
C7
VDD_3V3EXP/1.??
RS232A
JP2
MBUS+/1.??
MBUS-/1.??
SM6T39CA
D3
D2
D1
R2
1M
R1
U$4
RS232B
P$1
P$2
P$3
P$4
PTSM0,5/4-HH-2,5-THR
U2
VCC
V+
C1+
C1-
C2+
C2-
R1IN
R2IN
T1IN
T2IN
V-
T1OUT
T2OUT
R1OUT
R2OUT
RX1
RX2
TX1
TX2
C1
C2
C3
C4
SP3232EBCN-L
JP1
U$5
R7
100
RXD3
VDD_3V3EXP
2k
R4
BAT54
R5
R3
U1
RO
A
B
VCC
~RE
DE
DI
TXD3
MAX13487EESA+

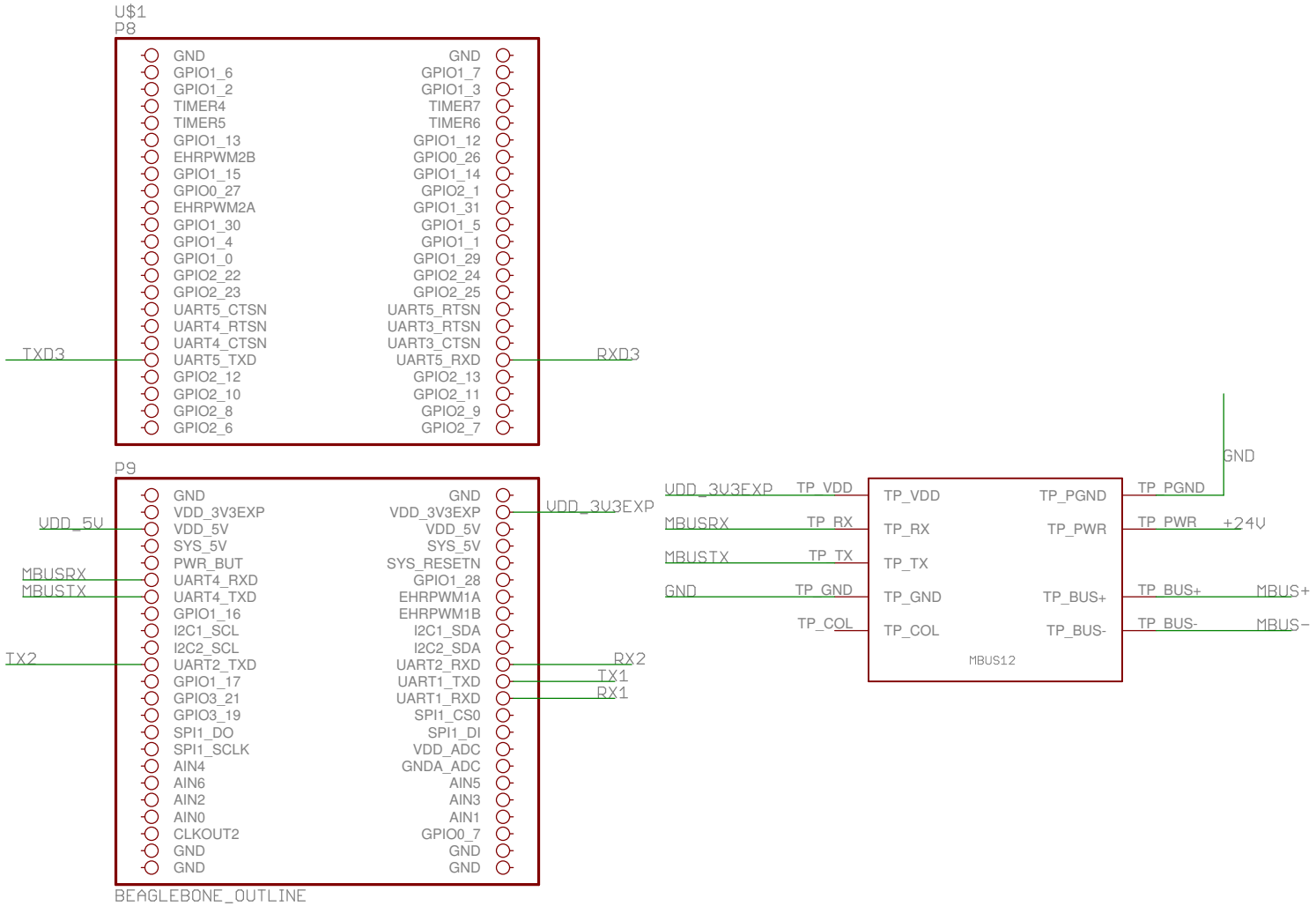
U$1
P8
GND
GPIO1_6
GPIO1_2
TIMER4
TIMER5
GPIO1_13
EHRPWM2B
GPIO1_15
GPIO0_27
EHRPWM2A
GPIO1_30
GPIO1_4
GPIO1_0
GPIO2_22
GPIO2_23
UART5_CTSN
UART4_RTSN
UART4_CTSN
UART5_TXD
GPIO2_12
GPIO2_10
GPIO2_8
GPIO2_6
GND
GPIO1_7
GPIO1_3
TIMER7
TIMER6
GPIO1_12
GPIO0_26
GPIO1_14
GPIO2_1
GPIO1_31
GPIO1_5
GPIO1_1
GPIO1_29
GPIO2_24
GPIO2_25
UART5_RTSN
UART3_RTSN
UART3_CTSN
UART5_RXD
GPIO2_13
GPIO2_11
GPIO2_9
GPIO2_7
TXD3
RXD3
P9
GND
VDD_3V3EXP
VDD_5V
SYS_5V
PWR_BUT
UART4_RXD
UART4_TXD
GPIO1_16
I2C1_SCL
I2C2_SCL
UART2_TXD
GPIO1_17
GPIO3_21
GPIO3_19
SPI1_DO
SPI1_SCLK
AIN4
AIN6
AIN2
AIN0
CLKOUT2
GND
GND
GND
VDD_3V3EXP
VDD_5V
SYS_5V
SYS_RESETN
GPIO1_28
EHRPWM1A
EHRPWM1B
I2C1_SDA
I2C2_SDA
UART2_RXD
UART1_TXD
UART1_RXD
SPI1_CS0
SPI1_DI
VDD_ADC
GNDA_ADC
AIN5
AIN3
AIN1
GPIO0_7
GND
GND
VDD_5V
MBUSRX
MBUSTX
TX2
VDD_3V3EXP
RX2
TX1
RX1
BEAGLEBONE_OUTLINE
VDD_3V3EXP
MBUSRX
MBUSTX
GND
TP_VDD
TP_RX
TP_TX
TP_GND
TP_COL
TP_VDD
TP_RX
TP_TX
TP_GND
TP_COL
TP_PGND
TP_PWR
TP_BUS+
TP_BUS-
MBUS12
GND
TP_PGND
TP_PWR
+24V
TP_BUS+
MBUS+
TP_BUS-
MBUS-